Acoustic Lighting

ecoPET

170 PET BOTTLES

up to 6.40 m² ACOUSTIC SURFACE



Band

EN Band is a high-performance acoustic pendant luminaire engineered for architects and lighting designers who demand both visual and auditory excellence in modern workspaces. Its clean geometry is softened by decoratively curved corners, creating a fluid, subtle floral silhouette made from sustainable acoustic ecoPET that surrounds the light source with a generous sound-absorbing surface and a completely hidden internal acoustic pillow for enhanced performance. At its core, the luminaire integrates a professional 600×600" mm" square lighting module to deliver high-quality workplace illumination, available in two tailored versions: Band Low for direct downward task lighting, and Band High featuring either direct illumination or a balanced direct/indirect option that casts soft upward radiance onto the ceiling to elevate the overall room atmosphere.

DE Band ist eine leistungsstarke Akustik-Pendelleuchte, die für optimale visuelle und akustische Bedingungen in modernen Arbeitsumgebungen entwickelt wurde. Ihre klare Geometrie wird durch dekorativ geschwungene Ecken aufgelockert und erzeugt eine fließende, dezente Silhouette. Gefertigt aus nachhaltigem Akustik-EcoPET, umgibt die Leuchte die Lichtquelle mit einer großzügigen, schallabsorbierenden Oberfläche und einem vollständig verborgenen, internen Akustikkissen für verbesserte Leistung. Erhältlich in zwei Ausführungen: Band L für direktes, nach unten gerichtetes Arbeitslicht und Band XL mit direkter und indirekter Lichtoption, die ein sanftes, nach oben gerichtetes Licht an die Decke wirft und so die Raumatmosphäre aufwertet.

Example

Band	standard power	4000 K	no frame	ARCHI felt color 1201 Cloud
2184	– 02 – 2	– 8	– 4 – 02	– 00 – 2 – archi1201
	size L	DALI	luminaire white 9010	pendant

Quickinfo

		Band S ■ 01	Band M ■ 02	Band L ■ 03
luminaire size		300×300×260	924×924×260	924×924×500
light source size		83×83	1 × 600×600	
			2 × 600×600	
system power	LO	↓10 W ⁓1	↓40 W	⁓1
	ST	↓15 W ⁓2	80 W (↑40 W ↓40 W)	⁓2
luminous flux	LO	↓924 lm	↓4512 lm	
	ST	↓1237 lm	↓4512 lm ↑4512 lm	
UGR		< 16	< 19	

Technical information

IP20 | >90 CRI | SDCM 3 | ~230V

light distribution – down		80°	90°
light distribution – up			90°
luminous efficiency		80 lm/W	114 lm/W
electrical control		ON / OFF	▲ 9
		DALI	▲ 8
color temperature		3000 K	● 3
		4000 K	● 4
luminaire color	S	black 9005	⬟ 01
	S M L	white 9010	⬟ 02
fabric color		ARCHI felt ecoPET color palette archixxx – choose color from page 332	◆ archixxx

Create my unique code!

2184 – ■ – ⁓ – ▲ – ● – ⬟ – 00 – 2 – ◆



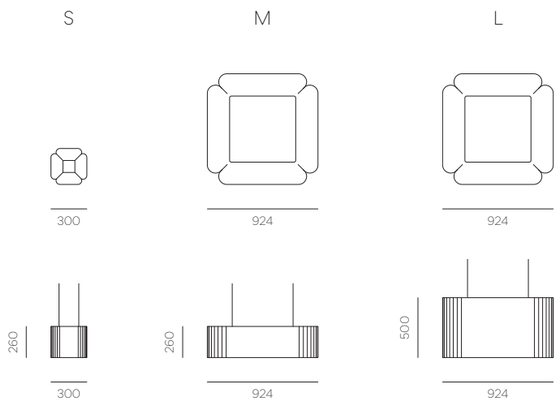

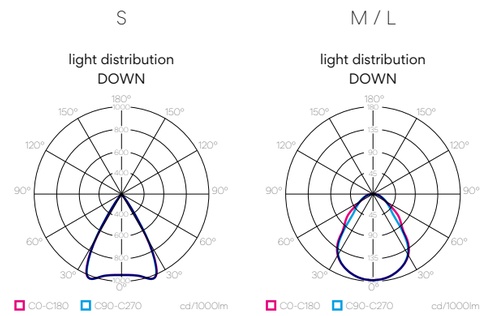

ARCHI felt ecoPET 12 mm

EN The high-quality PET sound panels are robust and durable, with a slightly textured surface that can be washed. They have excellent sound-absorbing properties, are flame-resistant and recyclable.

DE HochwertigePET-Akustikplatten sind massiv, strapazierfähig, mit einer leichttextilen Oberfläche, die gewaschen werden kann. Sie haben hervorragende Schalldämmeigenschaften, sind schwer entflammbar und können recycelt werden.

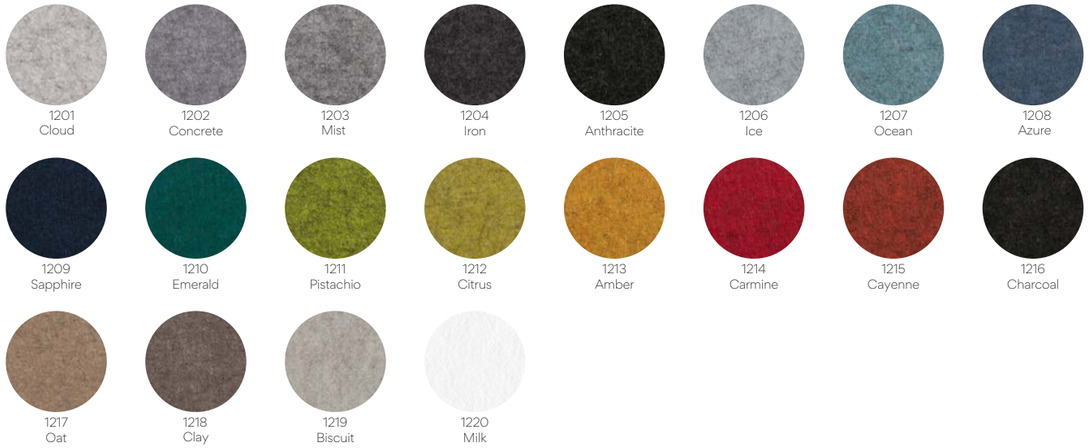

Special colors

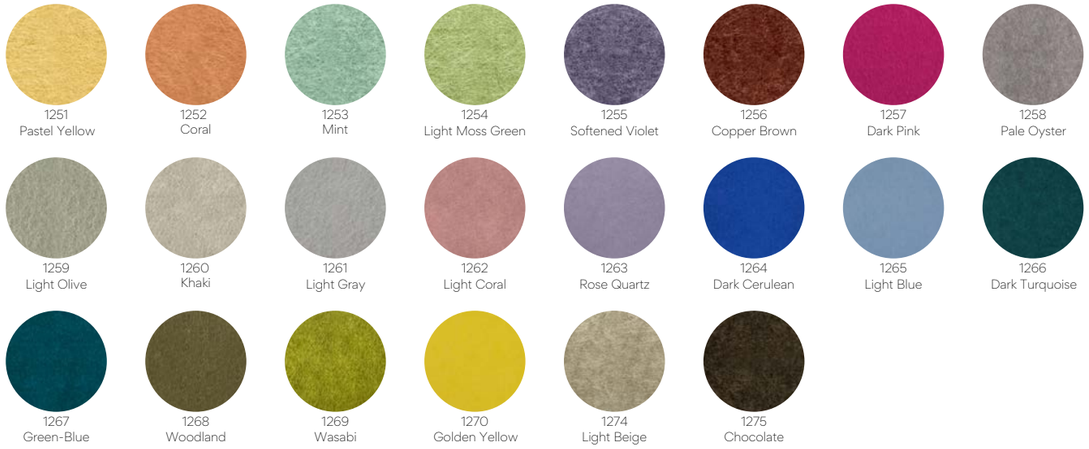

ARCHI felt ecoPET properties

Measurements: 2800 mm × 1200 mm × 12 mm (gross size)
Flammability Class: B-s1,d0
Acoustic values

Mounting method	Directly on the wall	50 mm cavity	50 mm cavity + 50 mm rockwool	100 mm cavity	100 mm cavity + 100 mm rockwool
NRC (100–5000 Hz)	0.40	0.75	0.95	0.80	1.00
aw (100–5000 Hz)	0.25	0.60	1.00	0.80	0.95
Acoustic Class	D	C	A	B	A

Take a closer look at sustainably manufactured ARCHIfelt ecoPET:

- is fire resistant to prevent the spread of fire
- is made from recycled plastic bottles and is fully recyclable again
- has a favorable sustainability profile (compared to glass and aluminum)
- does not contain VOCs or formaldehyde binders
- does not degrade, crumble or rot
- is durable and easy to clean
- provides excellent sound absorption properties

Guidelines for cleaning and maintenance of materials used in flexxica luminaires.

To maintain the beautiful color and appearance of flexxica lighting fittings, we recommend gentle vacuuming with a soft tip, preferably weekly.
EcoPET material
The ecoPET is made of 60% recycled PET bottles. It is straightforward to maintain, and stains can be removed easily and hassle-free.
Cleaning: Never rub hard to remove a stain. Always use a clean white cotton cloth with a bit of detergent.